Battery Management Solutions

- Automotive
- Mobile and Wearables
- Appliances

Littelfuse®

Expertise Applied | Answers Delivered

Each battery application group comes with its own risks – battery management & safety solutions share similarities

Reducing risks from short circuits, high temperature exposure, and mechanical damages

E-mobility

Target Applications:

- Passenger and commercial vehicles
- E-scooters and E-bikes
- Electric Golf Carts, Forklifts, etc.

Electric vehicles (passenger & commercial) share many functional blocks including common powertrain architectures

BMS
- Fuses
- TVS Diode
- SSR
- Diode Array

A

Battery Distribution Unit
- Bolt-down Fuses
- Contactors

E

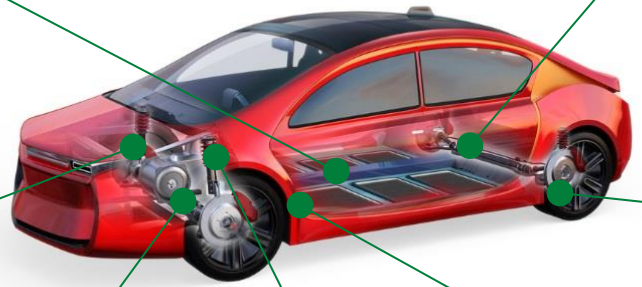

On-board Charger
- Fuses
- MOV, SIDACtor
- SCR
- TVS Diode, Diode Array

B

Heavy Loads
(EPS/Cooling System)
- Thermal Protection Mini
- TVS Diode, Diode Array
- Fuse

F

Traction motor inverter
- TVS Diode
- Diode Array
- Thermal Protection Mini
- Gate Driver

C

DC/DC Converter
- Fuse
- TVS Diode, Diode Array
- Gate Driver
- Thermal Protection Mini

D

Light Loads
- TVS Diode
- MOV
- Diode Array, MLV
- PolySwitch® PPTC

G

Click on the product series in the table below for more info

Energy storage system block diagram

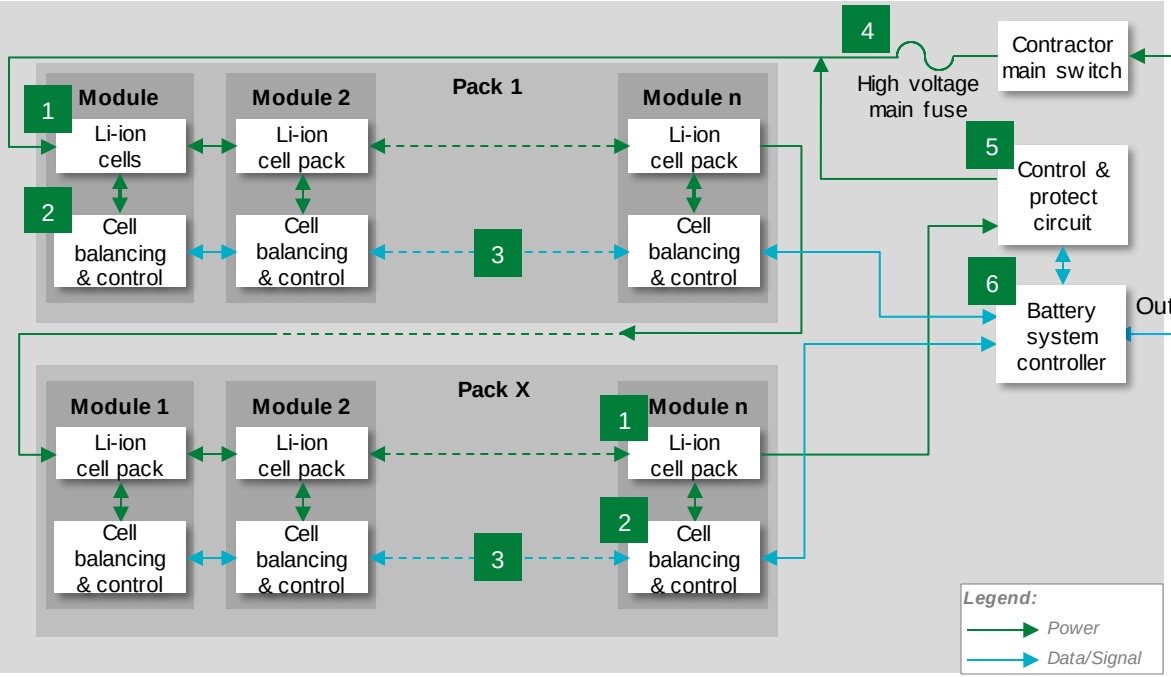

	Technology	Product Series
1	SMD Fuse	501A, 881A
	TVS Diode	TPSMC, SZ1SMC, SZ1.5SMC
2	SMD or In-line Fuse	438A, 441A, 521
	TVS Diode	TPSMB, SZ1SMB, SZP6SMB
3	Diode Array	AQ05C
	TVS Diode	TPSMA6L, SZ1SMA
4	High-voltage Fuse	SHEV, 20HEV
5	Gate Driver	IXD_6xxSI
6	Diode Array	AQ24CAN
	Fuse	885
	TVS Diode	TPSMB, TPSMC

Acronyms:
MOV: metal oxide varistor
TVS: transient voltage suppressor
SMD: surface mount device

Click on the product series in the table below for more info

Potential Littelfuse products for cell/module level protection

	Technology	Function in application	Series	Benefits	Features
1	SMD Fuse	Protects cells and downstream BMS components from high fault currents due to external shorts	501A, 881A	Excellent temperature stability and performance reliability; compact design; ceramic substrate ensures compatibility with high temperature environment	Tested to new AECQ specification; fast response to fault current; surface mount device
	TVS Diode	Transient Voltage Suppression	TPSMC, SZ1SMC, SZ1.5SMC	Excellent clamping capability; meets automotive industry standards; fast response time	AEC-Q101 qualified; meets IEC standards for ESD protection & ISO for in-vehicle transient surges
2	SMD or In-line Fuse	Protect cells and BMS components from overcurrent	438A, 441A, 521	Excellent temperature stability and performance reliability; compact design; ceramic substrate ensures compatibility with high temperature environment	Tested to new AECQ specification; fast response to fault current; surface mount device
	TVS Diode	Transient Voltage Suppression	TPSMB, SZ1SMB, SZP6SMB	Excellent clamping capability; meets automotive industry standards; fast response time	AEC-Q101 qualified; meets IEC standards for ESD protection & ISO for in-vehicle transient surges
3	TVS Diode	Transient Voltage Suppression	AQ05C	Excellent clamping capability; meets automotive industry standards; fast response time	AEC-Q101 qualified; meets IEC standards for ESD protection & ISO for in-vehicle transient surges
	Diode Array	Protects sensitive electronic ICs from ESD, EFT and voltage transient	TPSMA6L, SZ1SMA	Ensures reliability of the equipment without performance degradation	AEC-Q101 qualified; meets ESD protection levels specified under IEC 61000-4-2 , ISO10605; low leakage current & clamping voltage
4	High-voltage Fuse	Short Circuit Protection Overload Circuit Protection	SHEV, 20HEV	Provides safety protection in high-voltage environments, full range fuse	Bolt down form factor, high breaking capacity, qualified to ISO 8820 standard
5	Gate Driver	Controls the switching MOSFETs	IXD_6xxSI	Dual outputs provide space efficient design, high immunity to latch-up, rise/fall times less than 10ns	Tight tolerance, small form factor, fast thermal response.
6	Diode Array	Protect CAN bus from ESD, EFT and voltage transient	AQ24CAN	Ensures reliability of the equipment without performance degradation	AEC-Q101 qualified; meets ESD protection levels specified under IEC 61000-4-2 , ISO10605; low leakage current & clamping voltage
	SMD Fuse	Protects cells and BMS components from over current	885	High voltage SMD form-factor allows for compact design, ceramic body ensures compatibility with high temperature environment	Tested to new AECQ specification; fast response to fault current; surface mount device
	TVS Diode	Transient Voltage Suppression	TPSMB, TPSMC	Excellent clamping capability; meets automotive industry standards; fast response time	AEC-Q101 qualified; meets IEC standards for ESD protection & ISO for in-vehicle transient surges

Click on the product series in the table below for more info

Battery module block diagram

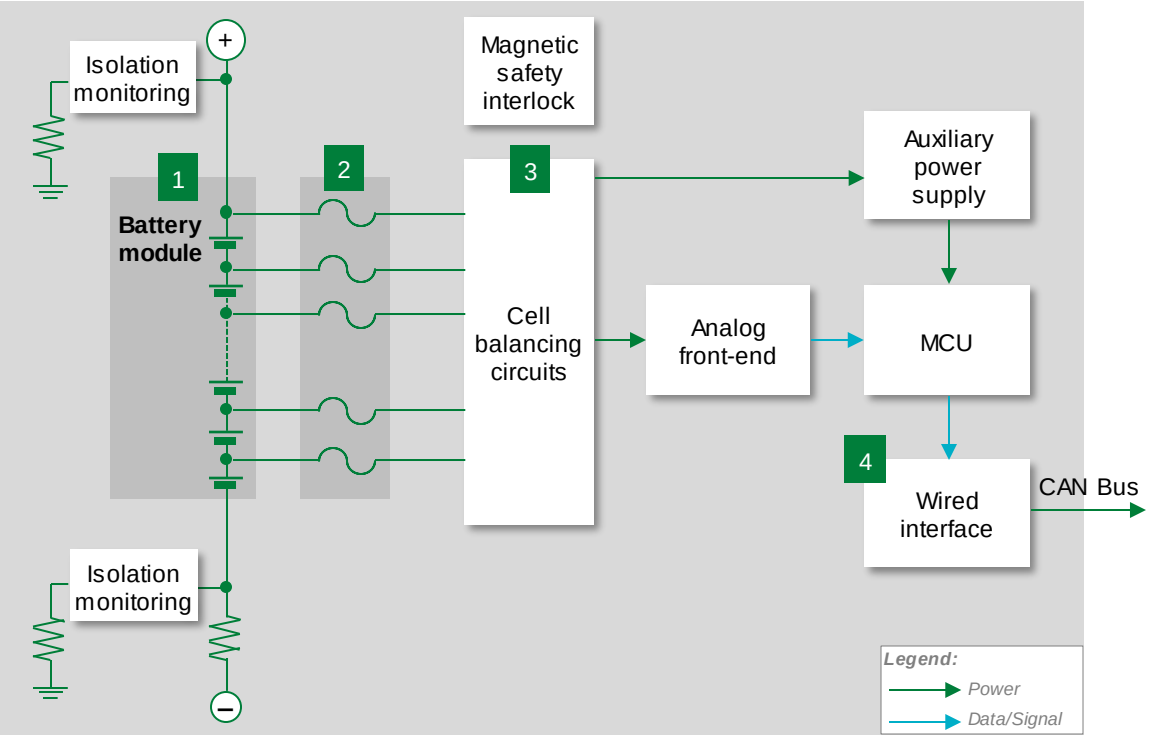

	Technology	Series
1	HV Fuse	885, 521
2	LV Fuse	440A, 437A, 438A
3	TVS Diode	TPSMB, SZ1SMB
4	Diode Array	AQ24CANA

Acronyms:
HV: high voltage
LV: low voltage

Click on the product series in the table below for more info

Protection and sensing solutions for battery packs

	Technology	Function in application	Series	Benefits	Features
1	HV Fuse	Protect battery pack module and cable from over current	885, 521	Reduces customer qualification time by complying with Third party safety standards such as ISO	Third party compliance UL/ISO; low internal resistance; shock safe; vibration resistant
2	LV Fuse	Analog front-end protection of user and environment in case of external short, overload between power-sense line	440A, 437A, 438A	AEC-Q compliant based on inhouse test, reduces customer qualification time by complying with third party safety standards such as UL/IEC; SMD form-factor allows for compact design	Surface mountable; compatible with lead-free solder process per IEC standards; high reliability
3	TVS Diode	Protect sensitive electronic components from voltage transients	TPSMB, SZ1SMB	Improves system reliability by protecting downstream components from transients on power lines	600 W peak pulse capability; compatible with lead-free solder reflow temperature profile
4	Diode Array	Protect can bus sensitive electronic ICs from ESD, EFT and voltage transient	AQ24CANA	Smaller form-factor and multi-line protection enables ease of design	AECQ-101 qualified; low capacitance; low leakage current

Mobile and wearables

Target Applications:

- Notebook, tablet, and smart phone
- Portable medical equipment, and POS terminal
- Two-way radio and emergency responder radio

Lithium-ion battery protection solutions in mobile devices

User input controls
- Diode Array
- EMI Filter

Power control module
- Power Inductor

Charge and sync input
- Diode Array
- EMI Filter

Cellular antenna
- Polymer ESD suppressor

Wi-Fi and Bluetooth
- Polymer ESD suppressor

Lithium-ion battery
- Resettable PPTC
- Diode Array
- Battery Mini breaker

Typical multi-cell battery protection block diagram

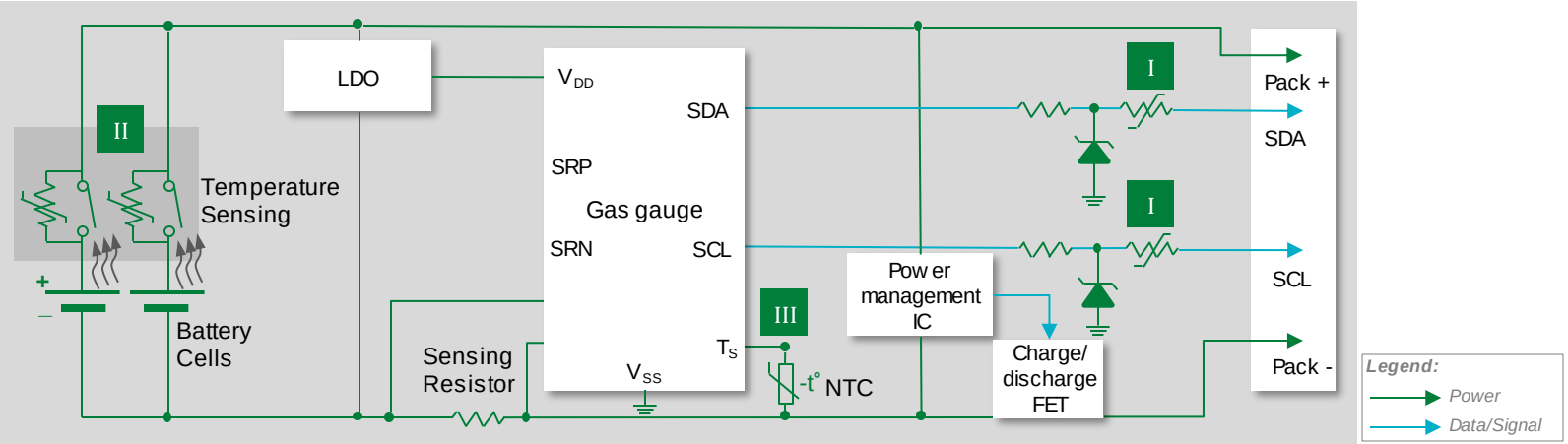

	Technology	Function in Application	Series	Benefits	Features
I	PPTC	overcurrent & overtemperature protection for battery management ICs & fuel gauges	zeptoSMDC	Resets to normal operation after fault is cleared; smaller footprint saves space	Maximum electrical rating: 13 VDC; short circuit current: 82~200 mA; small footprint 0201 size
II	Battery Mini-breaker	Secondary over-temperature and overcurrent protection	MHP-TAC	Longer battery life; sensitive thermal protection	I_{hold} up to 15 A, milliohm resistance, 72 to 90° C cut-off temperature
III	NTC	Ambient temperature measurement and temperature compensation for safe charge/discharge battery cycle	RA, RB, KR	Provides safe operation of battery; smaller footprint saves space	Surface mountable; small form-factor

Typical single-cell battery protection reference system

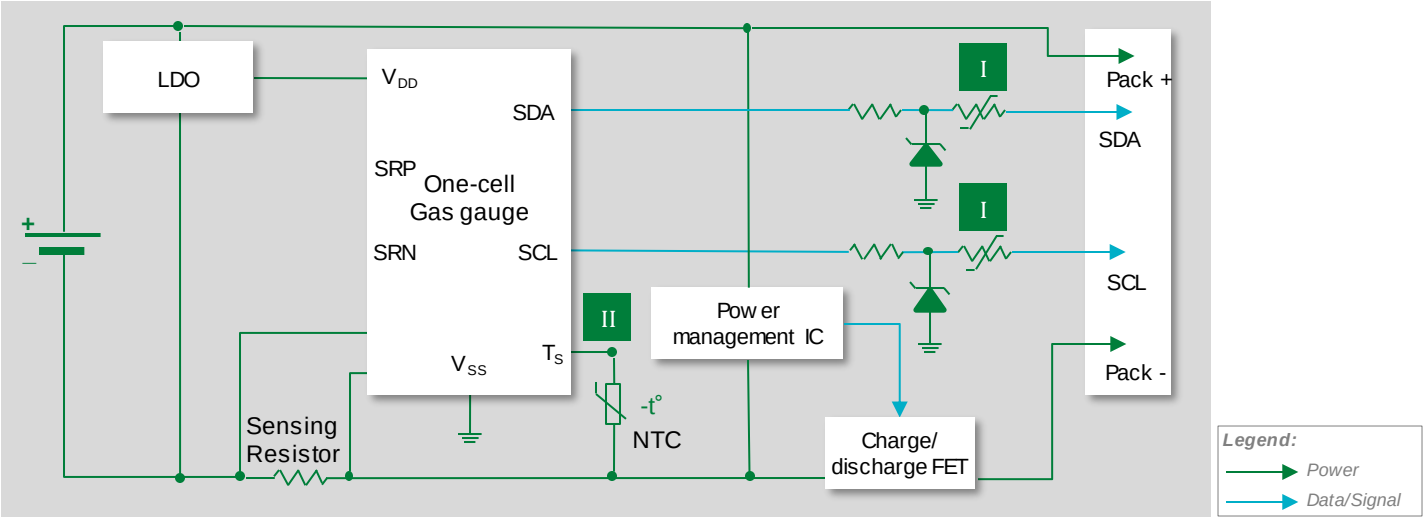

	Technology	Function in Application	Series	Benefits	Features
I	PPTC	Overcurrent & overtemperature protection for battery management ICs & fuel gauges	zeptoSMDC	Resets to normal operation after fault is cleared; saves space due to small footprint	Maximum electrical rating: 13 VDC; short circuit current: 82~200 mA; small footprint 0201 size
II	NTC	Ambient temperature measurement and temperature compensation for safe charge/discharge battery cycle	RA, RB, KR	Provides safe operation of battery; smaller footprint saves space	Surface mountable; small form-factor

Industrial tools and appliances

Target Applications:

- Power tools and commercial drones
- Autonomous lawn movers, portable & robotic vacuum cleaners, etc.
- Autonomous warehouse equipment

Battery packs used in power tools & appliances

Battery management unit

- Battery protectors
- Fuse
- TVS diode
- PPTC

Cell protection module

- NTC

Bluetooth module

- ESD protection

Battery-powered appliances

Hand-held appliances

Click on the product series in the table below for more info

Basic power tool or appliance battery pack block diagram

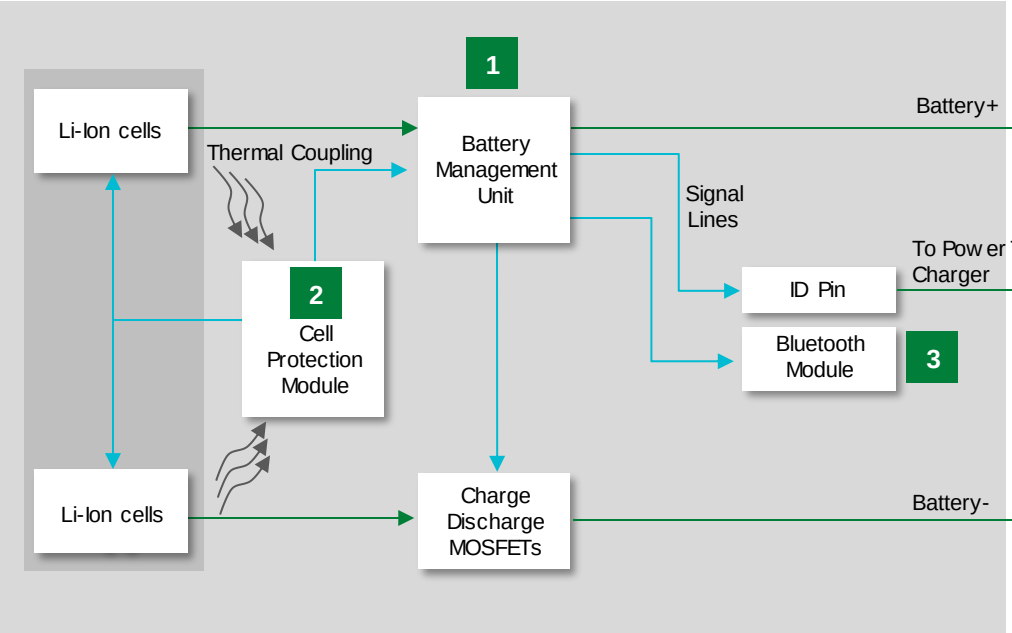

	Technology	Series
1	Fuse	Midi Fuse, BF1 , 881, 688
	TVS diode	SMF, SMF4L
	PPTC, Fuse	nanoSMD, 0805L
	Battery protectors	ITV
2	NTC*	KC series
3	TVS diode array	SP3021,SP1007

** Thermally coupled with Li-Ion cells.*

Acronyms:

NTC: negative temperature co-efficient
MOV: metal oxide varistor
TVS: transient voltage suppressor
PPTC: polymeric positive temperature co-efficient

Legend:
Power Line
Signal Line

Littelfuse
Expertise Applied | Answers Delivered

Click on the product series in the table below for more info

Typical products for tools & appliances battery packs

	Technology	Function in Application	Series	Benefits	Features
1	Fuse	Protect cells from high currents due to external shorts	Midi Fuse, BF1 , 881, 688	Reduces customer qualification time by complying with 3rd party safety standards such as UL/IEC	3rd party compliance UL/IEC, low internal resistance, shock safe, vibration resistant
	TVS Diode	Protects battery pack from over-voltage condition due to abnormal charging conditions	SMF, SMF4L	Improves system reliability by protecting downstream components from transients on power lines	Excellent clamping capability
	PPTC, Fuse	Protect cells and BMS MOSFET from high currents due to external shorts	nanoSMD, 0805L	Reduces customer qualification time by complying with 3rd party safety standards such as UL/IEC SMD form-factor allows for compact design	Surface mountable, resettable (PPTC), compatible with lead-free solder process per IEC standards,
	Battery protectors	Dual overcurrent and overvoltage protection	ITV	Increases assemble efficiency	Surface mountable; UL and TUV certified
2	NTC	Temperature monitoring of battery pack during charging & discharging cycles.	KC series	Provides accurate temperature reading for enabling safe device operation	Kynar insulated lead wires, small form factor, fast thermal response
3	TVS diode array	Protects IC from ESD	SP3021,SP1007	Protects end user from electrical shocks and physical harm	Hermetically sealed, custom designed sensitivity

Littelfuse
Expertise Applied | Answers Delivered

Select standards applicable to battery systems

Standard	Title	General Scope	Region
IEC 62133-2 & UL 62133-2	Safety requirements for portable sealed secondary lithium cells	Evaluating protection during various battery fault scenarios	Global
IEC/UL 62841-1	Safety standards for Transportable Hand-Held Motor Operated Electric Power Tools	IEC 62841-1 compliance testing deals with the hazards presented by tools. The standard covers tools with rated voltage is not more than 250V for single-phase AC or DC and 480V for three-phase AC. The rated input is not more than 3 700W"	Global/North America
UL 2595	General Requirements for Battery-Powered Appliance	The standard covers the safe functioning of lithium-ion battery systems and lithium-ion cells employed in battery systems. The maximum rated voltage for appliances and battery packs is 75Vdc	North America
UL 1642	Lithium Batteries	Both are Safety standard that deal with cells and small portable batteries. UL1642 deals with individual cells while UL2054 is for small rechargeable battery packs	North America
UL 2054	Household and Commercial batteries		North America
IEC 62281	Safety of Primary and Secondary Lithium Cells and batteries during transport	This standard specifies test methods and requirements for primary and secondary (rechargeable) lithium cells and batteries to ensure their safety during transport other than for recycling or disposal.	Global
JIS C8714	Safety Tests for Portable Li-Ion secondary cells and batteries	Covers safety testing of Li-ion storage batteries (single cell and multiple cell) for portable electronic devices	Japan
ANSI C18.2M	Portable Rechargeable Cells and Batteries	Defines safety standards for portable cells and batteries. It is specific to two distinct chemistry systems: lithium ion and nickel	North America

Additional information can be found on Littelfuse.com

Circuit Protection Selection Guide

Sensor selection guide

ESD suppression design guide

ESD protection design guide

Click on each image to open the catalog

Integrated Circuits Catalog

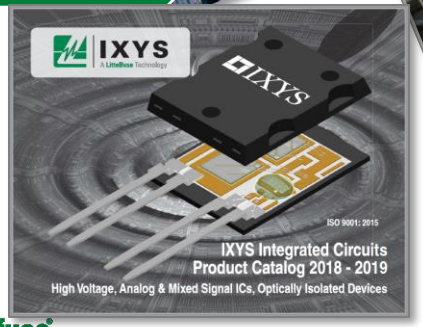

Protecting rechargeable Li-ion batteries

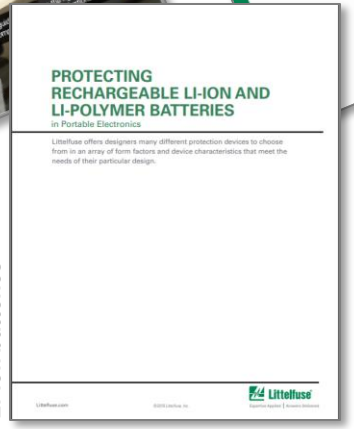

Circuit protection solutions Lithium cells

Local resources supporting our global customers

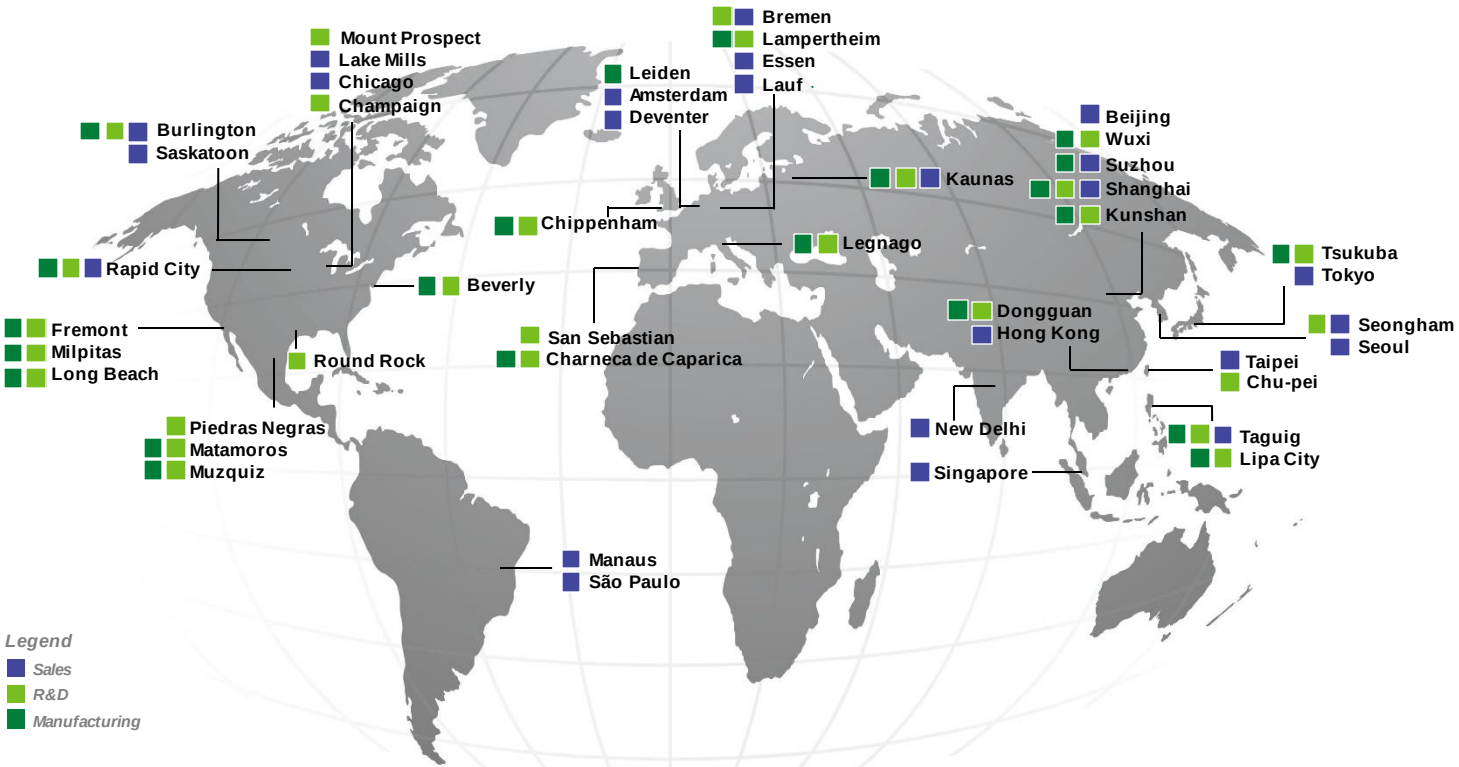

Littelfuse
Expertise Applied | Answers Delivered

...rtner fe... ...rrow's electronic systems

Broad pro... ...portfo...

A g... ...ead... ...r... portfolio, cove... ...of ...tection, sensing, a...

Application ex... ...se

...ur engineers partner directly with ...ustomers to help speed up product design and meet their unique needs

Global customer service

Our global customer service team is with you to anticipate your needs and ensure a seamless experience

Compliance & regulatory expertise

To help customer in design process to account for requirements set by global regulatory authorities

Testing capabilities

To help customer get products to market faster, we offer certification testing to global regulatory standards

Global manufacturing

High-volume manufacturing that is committed to the highest quality standards

Littelfuse®
Expertise Applied | Answers Delivered

Littelfuse, Inc. © 2020

Littelfuse®

Expertise Applied | Answers Delivered

IXYS

A Littelfuse Technology

Littelfuse.com

Supplementary slides

Battery pack for E-mobility

Click on the product series in the table below for more info

BMS E-bike battery

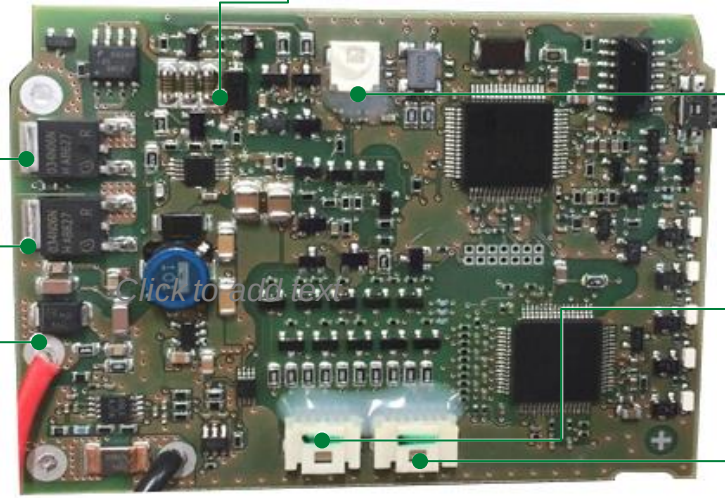

Protect Control Sense

Technology	Function in application	Littelfuse series	Benefits	Features
MOSFET	Switching the charge/discharge cycles based on controller feedback	L2 Series	Fast switching and better thermal stress allows for compact efficient system design	High electrical and thermal stress capability in linear mode, guaranteed FBSOA at 75°C, Low RDS-on.

Battery pack for power tools

Click on the product series in the table below for more info

Bosch Core: 18 V/6.3 Ah, 113 Wh

Cartridge Fuse 5 mm X 15 mm
Make: Littelfuse Inc.
LFUS: 2AG

SMD NTC 0603 6.7 KΩ
Make: Littelfuse Inc.
LFUS: RB

Li-ion rechargeable 20700 Cell
3.6 V/3.15 Ah, 5S2P configuration
Make: Panasonic

Top side

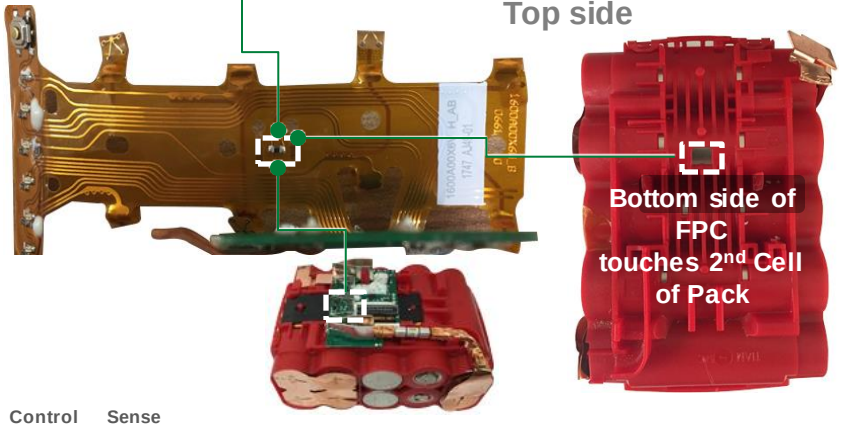

Protect Control Sense

Technology	Function in application	Littelfuse series	Benefits	Features
Fuse	Protects cells from high currents due to external shorts	2AG	Reduces customer qualification time by complying with 3rd party safety standards such as UL/IEC	Third party compliance UL/IEC Fast-Acting/Slo-Blo® (Time-Lag)
NTC	Temperature sensing	RB	Board space saving	Surface mountable, small size; low cost

Click on the product series in the table below for more info

DeWALT Flexvolt 20 V/60 V li-ion battery pack

14 TVS diodes in various sizes with generic marking are found on the bottom side of the board (Marked in RED)

1206 Slo-Blo® Fuse
Make: Belfuse
LFUS: 468 series

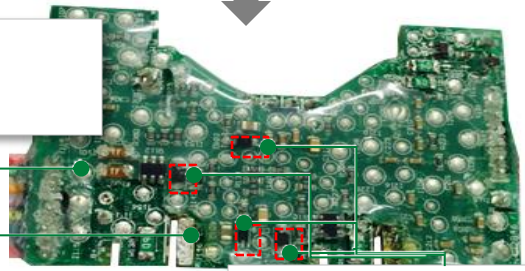

TVS diode
Make: Unknown
LFUS: SMF series

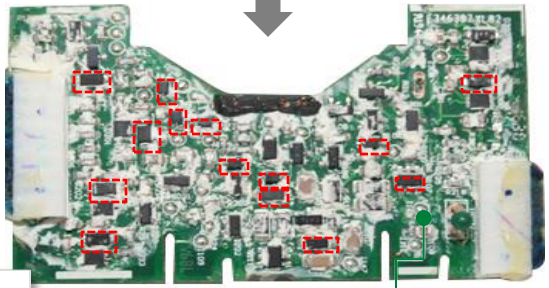

NTC
Thermistor

Protect Control Sense

Technology	Function in application	Littelfuse series	Benefits	Features
Fuse	Protects cells from high currents due to external shorts	468	Reduces customer qualification time by complying with 3rd party safety standards such as UL/IEC; board space saving	Third party compliance UL/IEC Slo-Blo® (Time-Lag); surface mount
TVS diode	Protects battery pack from over-voltage condition due to abnormal charging conditions	SMF, SMF4L	Improves system reliability by protecting downstream components from transients on power lines	Excellent clamping capability

Littelfuse
Expertise Applied | Answers Delivered

Battery pack for blower

Click on the product series in the table below for more info

Ryobi battery pack: 40 VDC 108 Wh; 3.0 Ah

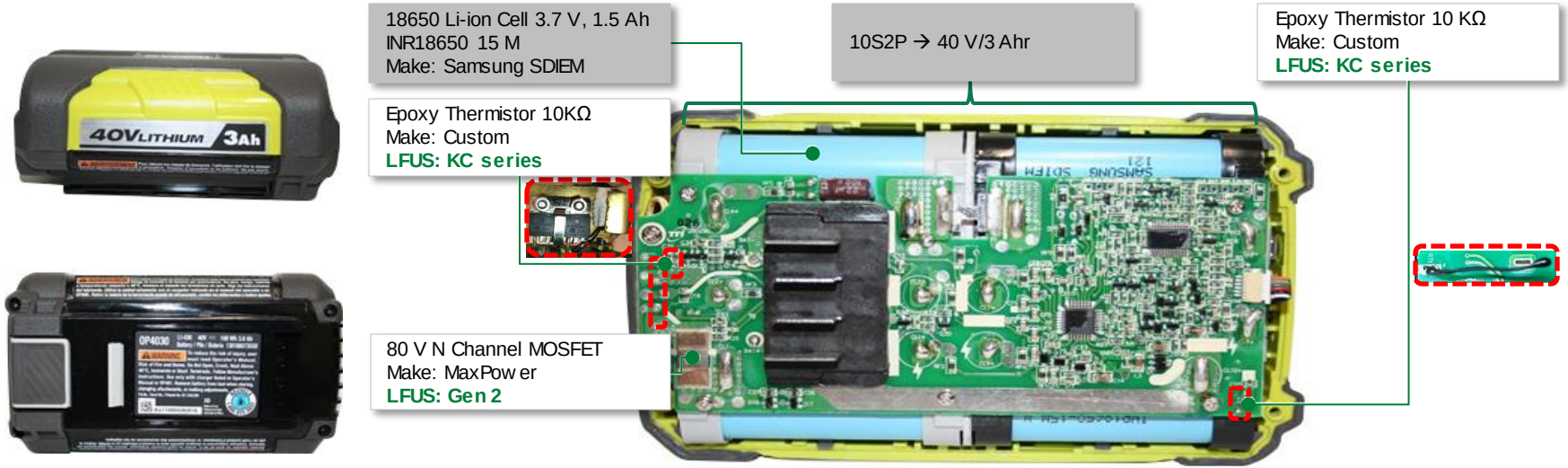

Protect Control Sense

Technology	Function in application	Littelfuse series	Benefits	Features
NTC	Temperature monitoring of battery pack during charging & discharging cycles.	KC	Provides accurate temperature (component/ambient) for enabling safe device operation	Tight tolerance, small formfactor, fast thermal response
MOSFET	Switching the charge/discharge cycles based on controller feedback	Gen 2	Improves system efficiency and enables compact design	Very low Rds(on), High current capability

Littelfuse®

Expertise Applied | Answers Delivered

IXYS

A Littelfuse Technology

Littelfuse.com